Lecture 23

The divergence theorem (16.9)

Recall: $\iint_S \vec{F}\cdot\hat{N}\,dS$ = "flux of $\vec{F}$ across S"

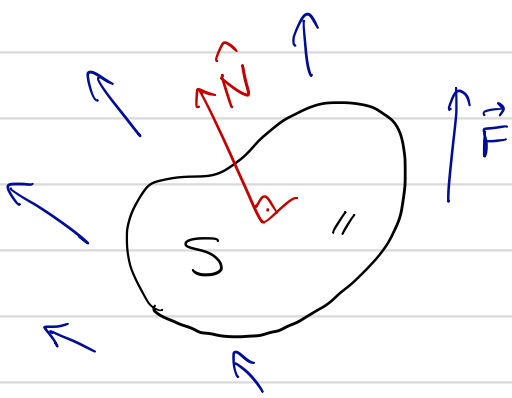

Interpretation:

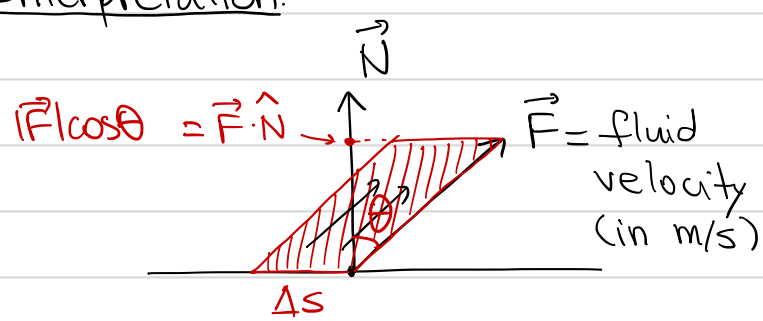

$\Delta s\cdot(\vec{F}\cdot\vec{N})$ = Volume of fluid through Δs in one second

Example: Flux of $\vec{F}=(z,y,x)$ out of the box $E=[1,2]\times[0,2]\times[2,4]$.

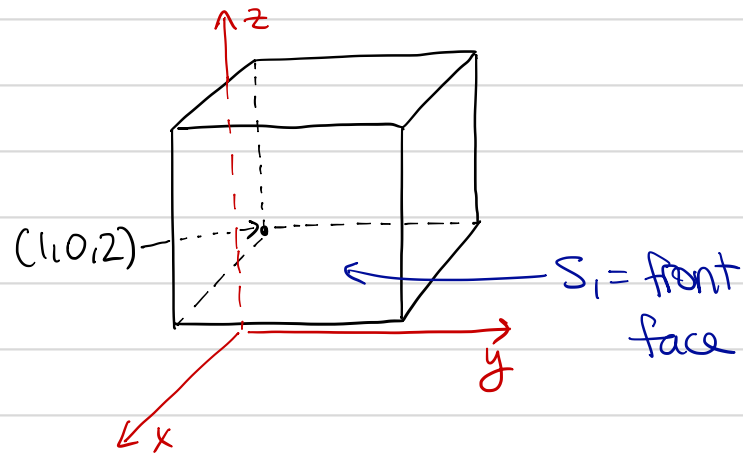

$$\text{Flux} = \iint_{S_1} \vec{F}\cdot\hat{N}\,dS + \text{five other integrals}$$

On S_1: $x=2,\ y=y,\ z=z$
$(0\le y\le 2,\ 2\le z\le 4)$

$$\hat{N}\,dS = \underbrace{\langle 1,0,0\rangle}_{\vec{r}_y\times\vec{r}_z}\,dy\,dz$$

$$\vec{r}_y\times\vec{r}_z = \begin{vmatrix} \hat{i} & \hat{j} & \hat{k} \\ 0 & 1 & 0 \\ 0 & 0 & 1 \end{vmatrix} = \hat{i}$$

$$\iint_{S_1} \vec{F}\cdot\hat{N}\,dS =$$

$$= \int_{y=0}^{2}\int_{z=2}^{4} \underbrace{\langle z,y,2\rangle\cdot\langle 1,0,0\rangle}_{z}\,dz\,dy$$

$$= \int_0^2 \frac{z^2}{2}\Big|_2^4\,dy = 2(8-2) = 12$$

Divergence Theorem

$$\boxed{\iint_S \vec{F}\cdot\hat{N}\,dS = \iiint_E \operatorname{div}(\vec{F})\,dV}$$

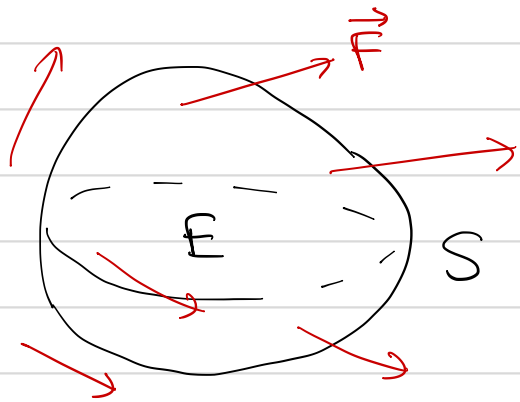

$\vec{F} = \langle P, Q, R\rangle$

$\operatorname{div}\vec{F} = \frac{\partial P}{\partial x} + \frac{\partial Q}{\partial y} + \frac{\partial R}{\partial z} = \nabla\cdot\vec{F}$

$\hat{N}$: Outward unit normal

Example: Flux of $\vec{F} = (z, y, x)$ out of the cube

$E = [1,2]\times[0,2]\times[2,4]$.

$$\operatorname{div}\vec{F} = \frac{\partial}{\partial x} z + \frac{\partial}{\partial y} y + \frac{\partial}{\partial z} x = 1$$

$$\text{Flux} = \iint_S \vec{F}\cdot\vec{N}\,dS = \iiint_E 1\cdot dV$$

$$= \operatorname{Vol}(E) = 1\cdot 2\cdot 2 = 4 \,//$$

Flux across other five faces $= \iint_S \vec{F}\cdot d\vec{S} - \iint_{S_1} \vec{F}\cdot d\vec{S}$

$= 4 - 12 = -8$

Proof of the theorem

Goal:

$$\iint_S \langle P, Q, R\rangle\cdot d\vec{S} = \iiint_E P_x + Q_y + R_z\,dV$$

Let's check

$$\iint_S \langle 0, 0, R\rangle\cdot d\vec{S} = \iiint_E R_z\,dV$$

when E is the region

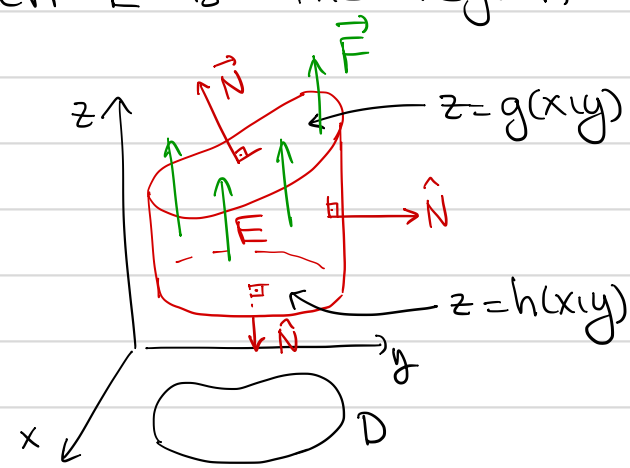

RHS:

$$\iiint_E R_z\,dV = \iint_D \int_{z=h(x,y)}^{g(x,y)} R_z\,dz\,dx\,dy$$

$$= \iint_D R(x,y,g(x,y)) - R(x,y,h(x,y))\,dx\,dy$$

LHS:

$$\iint_S \vec{F}\cdot d\vec{S} = \iint_{Top} + \iint_{Bottom} + \iint_{sides}$$

Top: $d\vec{S} = \hat{N}\, dS$

$$= \langle -g_x, -g_y, 1\rangle\, dx\, dy$$

$$\iint_{Top} \langle 0,0,R\rangle \cdot d\vec{S} = \iint_D R\, dx\, dy$$

$$= \iint_D R(x,y,g(x,y))\, dx\, dy \;//$$

Bottom: $d\vec{S} = \hat{N}\, dS$

$$= -\langle -h_x, -h_y, 1\rangle\, dx\, dy$$

$$\iint_{Bottom} \langle 0,0,R\rangle \cdot d\vec{S} = \iint_D (-R)\, dx\, dy$$

$$= -\iint_D R(x,y,h(x,y))\, dx\, dy$$

Sides: $\vec{F} = \langle 0,0,R\rangle$ is vertical

$\hat{N}$ is horizontal

$$\Rightarrow \iint_{sides} \vec{F}\cdot\hat{N}\, dS = 0 \;//$$
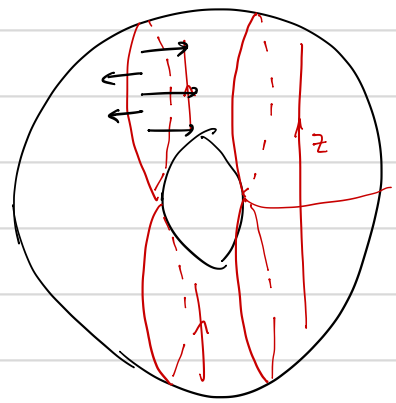
When E is not vertically simple, we break it into pieces that are: